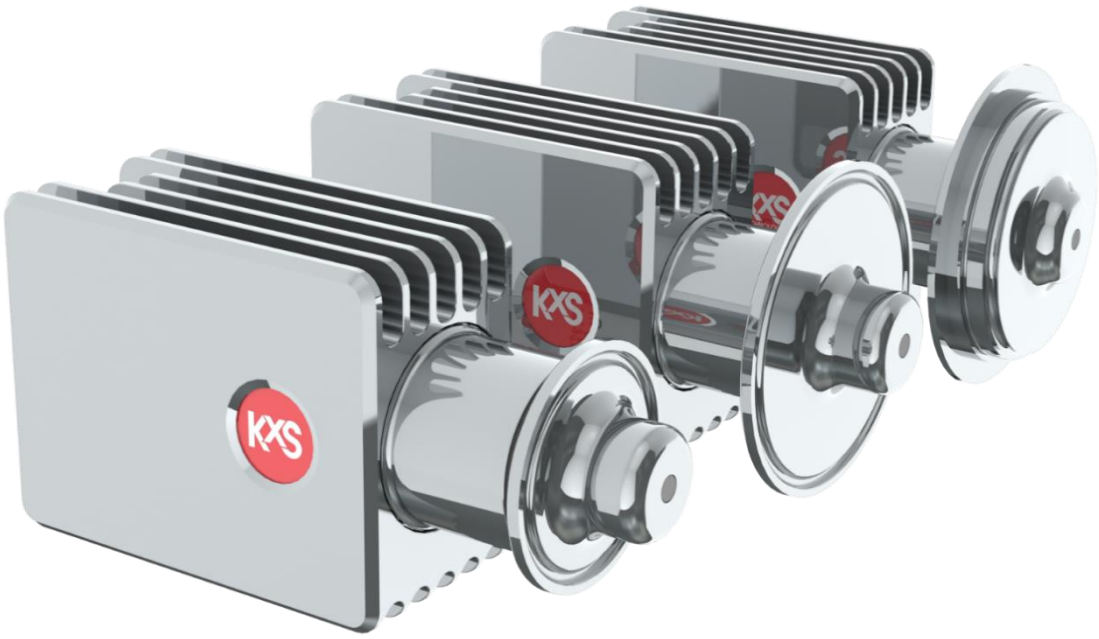

USER'S MANUAL

DCM-20 INLINE OPTICAL BRIX MONITOR

KXS TECHNOLOGIES v.1.04/2021

Contents

User's Manual

General safety considerations

Use personal protection equipment PPE suitable for the process environment and liquid. Be aware that the process liquid may transfer heat to the sensor head. Remove the sensor from the process pipe before any maintenance or service actions are taken.

Introduction

DCM-20 inline optical Brix monitor provides real-time measurement in sanitary process applications. The liquid measurement technology is based on refractive index. The refractive index unit RIU is a physical measure of a liquid's dissolved material following the theory of Snell's law. KxS Technologies' refractometers are used in various industries and critical process systems for liquid concentration measurements of total dissolved solids.

The sensor calibration is performed with NIST traceable standard refractive index liquids and a defined process at KxS Technologies' technology center.

The inline optical Brix monitor DCM-20 includes an integrated pT-1000 temperature element for process temperature measurement and simultaneous automatic temperature compensation of the Brix concentration measurement.

The instrument integration to process environments and control systems with industrial standard communication protocols is flexible with stand-alone Brix monitor setups, as well as optional modular connection units and external displays.

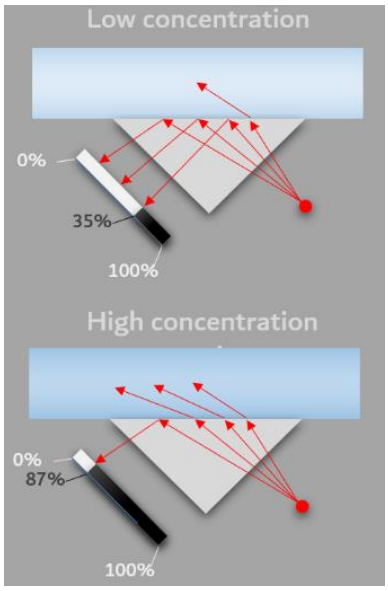

1. Connection

The inline optical Brix monitor DCM-20 operates with 24VDC input power supply. The communication signal is transferred through either an analog 4-20mA port, or a digital Modbus TCP port. Respective shielded connector port carries a 24VDC input power supply pinout. When the analog output port is chosen, the other digital port is used as a service channel for sensor parameter and diagnostics update in the user interface on a computer web browser, external display, or mobile device. All user interface options can be used simultaneously.

1.1 Sensor connectors

Two independent sensor connectors are available. Both shielded connectors are designed with 24VDC power supply pinouts. The analog port is designed with 2x 4-20mA pinouts. The digital port is designed for Modbus TCP communication output and user interface connection (Fig. 1).

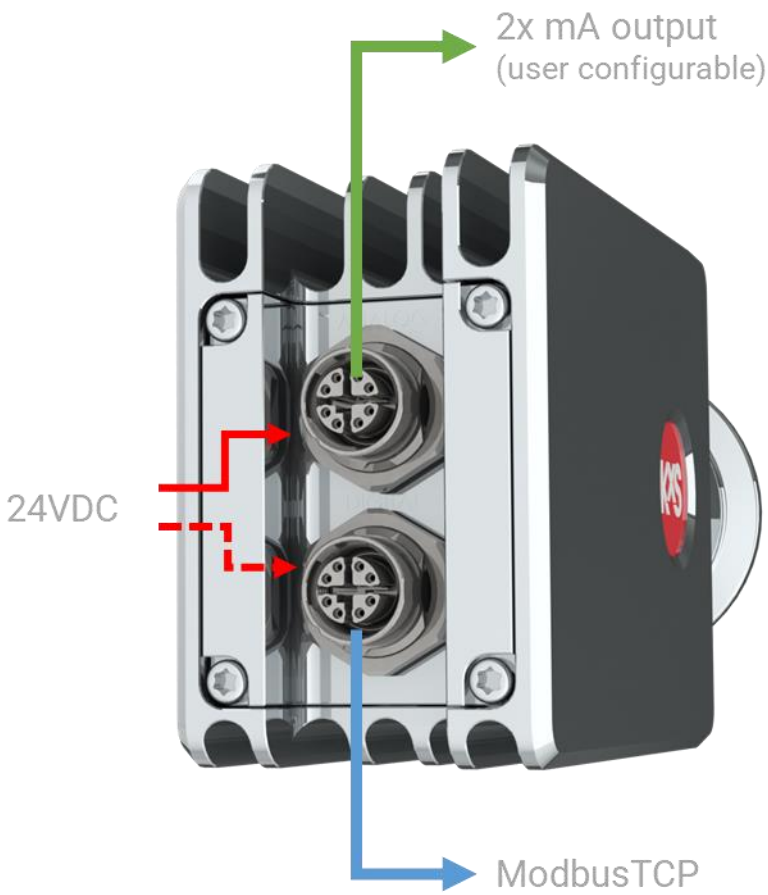

Figure 1 DCM-20 inline optical Brix monitor connectors

1.2 Sensor integration concept

Inline optical Brix monitor DCM-20 is 3-A and EHEDG certified. The stand-alone optical sensor is connected directly to 1.5” or larger process pipes. Single piece flow cells SPC are available for 1” or larger pipes. The SFC is with an optional optical window wash nozzle mount. Sensor mounting instructions found in section 2.

The sensor wetted parts are of stainless steel 316L EN 1.4435 according to industry standard surface roughness, sapphire optical window, and PTFE sealing. The sealing material is FDA approved and specified according to EU regulation for material in contact with food. The sensor head is of stainless steel 316.

The sensor cable connection is with one identical M12 cable model connected either to the sensor analog or digital shielded connector port. Both sensor connectors can receive 24VDC power input. Both sensor cables can be connected when the analog output is chosen, and the digital connector serves simultaneously as access to user interfaces. A connector not in use shall be plugged.

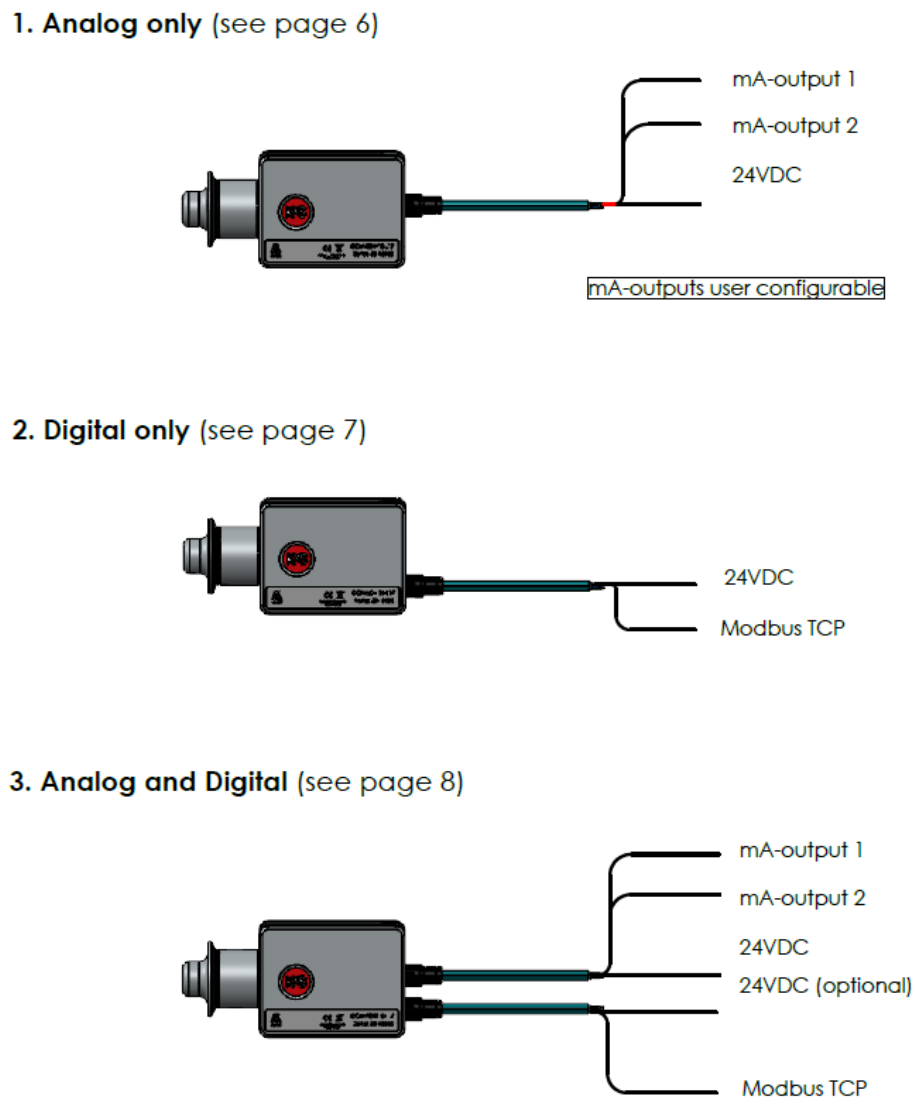

Figure 2 Inline Brix monitor DCM-20 operation concept. DWG No. 10125.

1.3 Cable connection with electrical modules

Regardless of analog or digital output port connection, one identical cable model serves both options. The shielded cable is with 24VDC power supply wires, Ethernet CAT 6A communication wires, and analog communications wires for 2x 4-20mA outputs.

The SP-9000 sensor cable provided is with a M12 SPEEDCON male connector (IEC 61076-2-109) attached to the corresponding sensor female connector. The twisted pair cable structure is according to 4x2xAWG26/7; S/FTP. Outer sheath material is polyurethane PUR water blue RAL 5021.

The cable end is free with 8 wires following given pinout schedules below.

When **sensor analog output** is chosen, the 8 free-end cable wires are connected to the power supply SP-9400 according to Fig. 3. leaving 4 wires for the 2x analog mA signal connection.

Analog connector (M12 X-code)

Pin no.	Description	Wire color
1.	Not connected	WH/OG
2.	Current out 2-	OG
3.	Not connected	WH/GN
4.	Current out 1-	GN
5.	Current out 1+	WH/BN
6.	Current out 2+	BN
7.	24VDC+	WH/BU
8.	24VDC-	BU

Wire pinout schedule for analog mA output connection.

Digital connector (M12 X-code)

Pin no.	Description	Wire color
1.	Ethernet Tx+	WH/OG
2.	Ethernet Tx-	OG
3.	Ethernet Rx+	WH/GN
4.	Ethernet Rx-	GN
5.	Not connected	WH/BN
6.	Not connected	BN
7.	24VDC+	WH/BU
8.	24VDC-	BU

Wire pinout for digital Ethernet Modbus TCP output connection.

When **sensor digital output** is chosen, the 8 free-end cable wires are connected to the power supply SP-9400 and RJ-45 connector SP-9310 according to the pinout schedule in Fig. 4. The RJ-45 connector is connected to the industrial ethernet switch SP-9320 with 4+1 available ports. The industrial ethernet switch serves connection of industrial communication protocol converter modules, external displays, and WLAN modules. When the digital Modbus TCP signal is chosen, an additional module is available for conversion to other industrial protocols, for example Ethernet IP or ProfiNet. See separate third party user's manual for the industrial protocol converter modules.

When the analog output is chosen for measurement values, the digital channel is used for connecting to the user interface on a computer web browser or external display. When connecting the digital port, an identical second cable is connected to the sensor digital M12 connector port and the free-end wires are connected to the RJ-45 connector SP-9310 (Fig.5) in Pin no. 1-4 according to the wiring schedule in Fig. 4. The corresponding color coding is found on the RJ-45 connector SP-9310 with A coding. An assembled M12 cable with RJ-45 connector is available from KxS Technologies upon request.

Figure 3 Power supply unit (Part No: SP-9400), RJ-45 connector (Part No: SP-9310), Industrial Ethernet Switch with 4+1 ports (Part No: SP-9320), and Universally configurable limit value switch with 1x relay output (Part No: SP-9700).

The inline optical Brix monitor DCM-20 can be configured with high and low measurement alarms as described in section 4.4.3, as well as optical window wash system as described in section 3.3 and its user interface configuration in section 4.4.4. The universally configurable limit switch SP-9700 with 1 pcs changeover relay output and plug-in connection technology is used for monitoring analog limit values output from the sensor analog measurements. The limit values are configured with physical DIP switches with one relay per SP-9700 module. Two limit value switches are connected in serial when two relays for both low and high measurement alarms, or both precondition and wash functions for optical window wash systems are defined. The 10x physical DIP switches are activated or kept inactivated to follow a defined sensor analog mA limit behavior in the 4-20mA range. See section 3.3 for optical window wash system configuration and section 4.4.3 for low and high alarm function configuration.

1.4 System drawing of DCM-20 and Modular Connection Unit

The system drawing of standard Brix monitor unit found in Fig. 6. The modular connection unit MCU consists of a set of control and converter modules. Each MCU can be mounted in a stainless-steel enclosure with IP66, NEMA 4x classification.

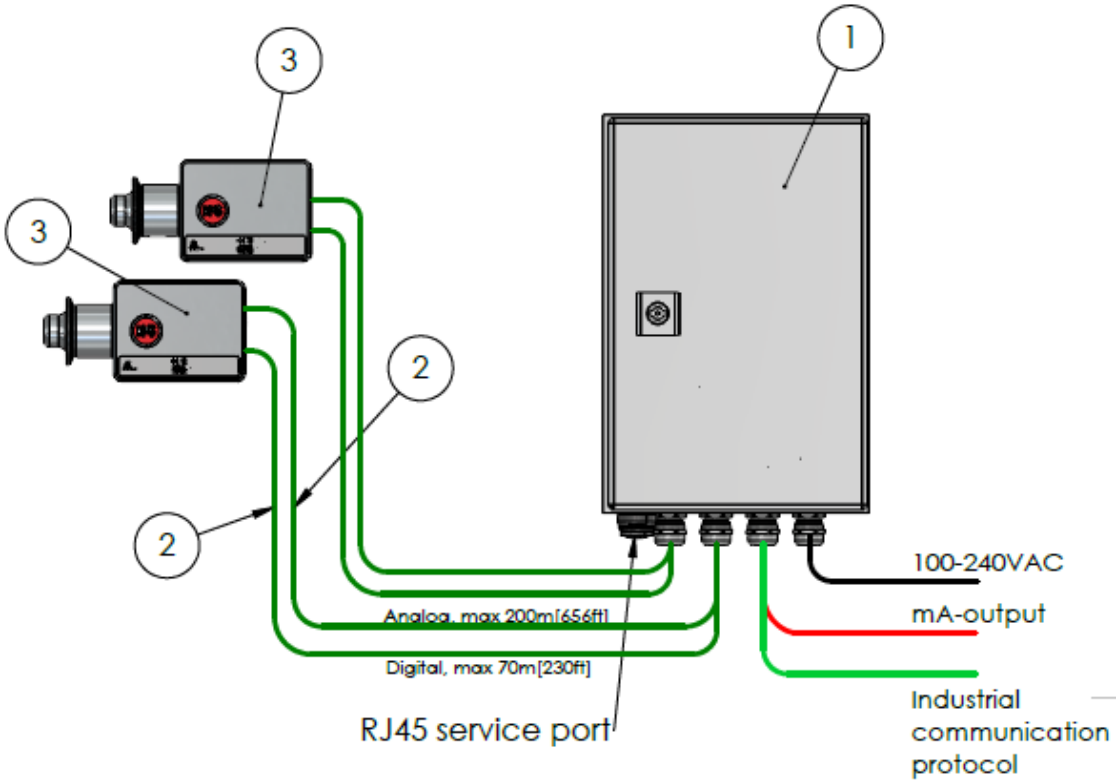

Item No.	Description	Qty
1	MCU Modular connection unit	1
2	SP-9000-... Sensor cable	1-4
3	DCM Digital Concentration Monitor	1-2

Figure 4 System drawing of inline optical Brix monitor DCM-20 and Modular Connection Unit MCU. DWG No. 10176.

1.5 User interface

Every sensor is delivered with the factory default IP address of 192.168.10.20. The sensor user interface is accessed through the sensor digital port when connecting the sensor to a computer with a web browser, external display, or mobile device. The sensor digital output port carries the Modbus TCP signal and connects to the user interface with a standard RJ-45 connector. The factory set sensor IP address 192.168.10.20**.** is entered in the address field of a computer web browser, external display, or mobile device. The homepage offers access to read measurement values and diagnostics, configure parameter and verify sensor calibrations. KxS Technologies recommends using Google Chrome, Microsoft Edge, or Firefox web browser.

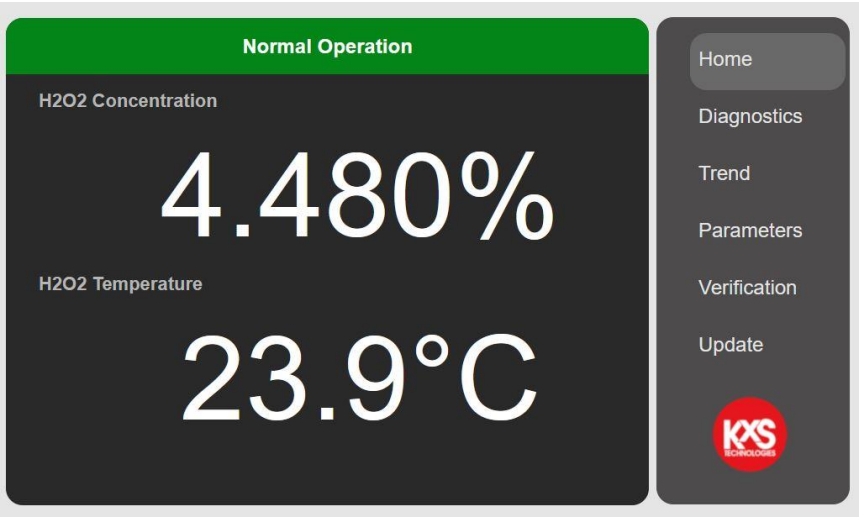

Figure 5 Sensor homepage of user interface on a computer web browser or external display SP-9500/SP-9520.

1.5.1 Computer setup

Verify in the computer command prompt, (in Windows, press Start button and type *Command Prompt*) by typing *ipconfig*, that the computer IP address is set to the same 192.168.x.y network. The last two digits .x.y on the computer must not be the same as the corresponding for the sensor IP address .10.20.

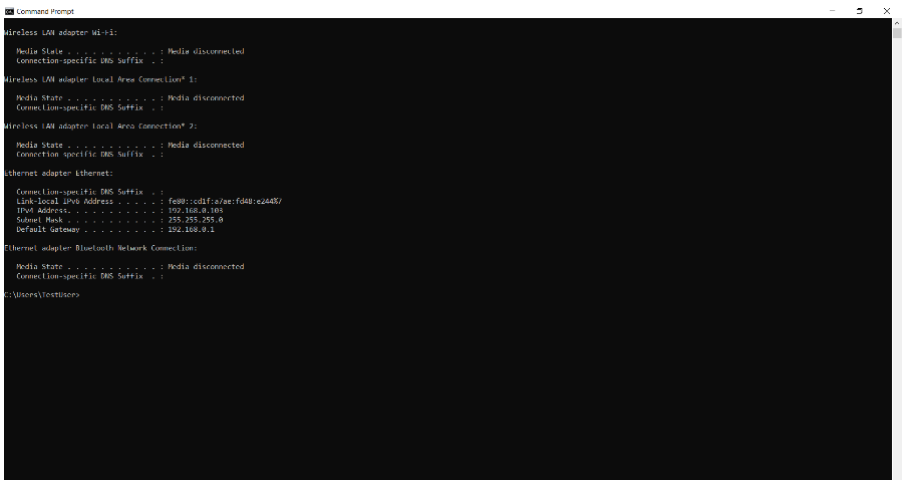

Figure 6 Command prompt on computer for IP address verification.

1.5.2 External display setup

An external industrial display is available with a panel mount design and 7” multi touch panel for user interface and measurement reading display purposes. The display is powered with 24VDC. The sensor Ethernet cable is connected to the touch panel with a RJ-45 port Fig 9. When the display is powered up, opt for the configuration page during display start-up.

Figure 7 Cable connections to the external display and activation of configuration page during power up.

To set up the display panel’s IP address go to section *Network* and dial in settings as in Fig 10. Select Static IP. IP address with 192.168.x.y where x.y is any other ending than the corresponding for the sensor .10.20. Subnet Mask 255.255.255.0. Confirm by pressing √.

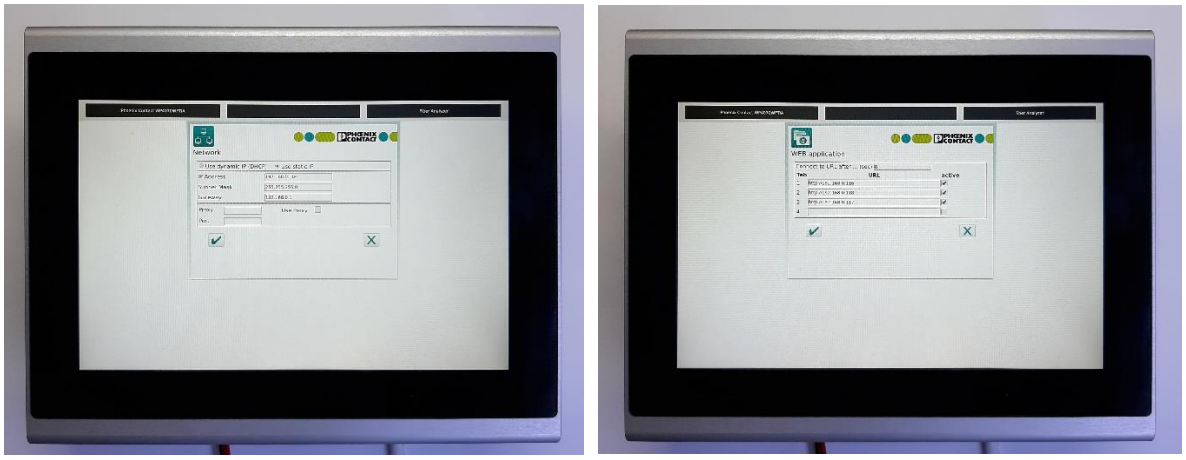

Figure 8 Display IP settings in section Network and connecting display to sensor IP in section Web application.

The touch panel unit can display four sensors by selecting respective sensor IP line ‘active’ in section *Web application* of the display user interface Fig 10. Confirm by pressing √. The settings are applied by pressing the Restart button seen in Fig 11.

Figure 9 Restart the display by pressing the lower left button on the display to apply configuration settings and changes for activation of the sensor user interface homepage.

1.5.3 Mobile device setup

A mobile device with a USB-C port can be connected for accessing the user interface. An Ethernet cable from the industrial switch is connected through a standard RJ-45 to USB-C adapter. The USB-C connector is connected to the mobile device. The mobile device is set to Airplane mode. Following the mobile device *Settings* path from left to right in Fig. 12, allows access to the sensor user interface. When the settings are done, open a web browser and type the sensor IP address in the address field (default: 192.168.10.20).

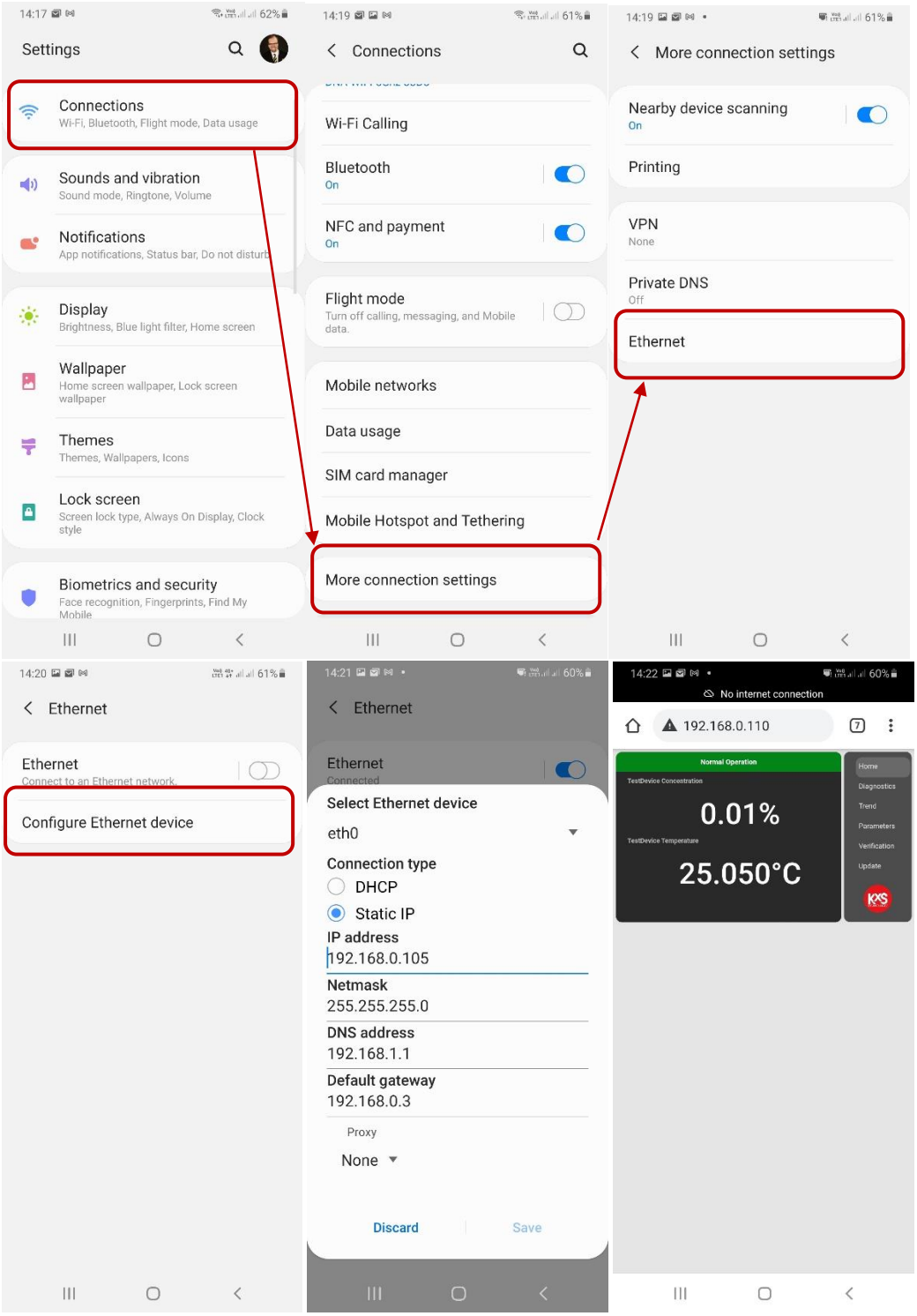

Figure 10 Mobile device setting path for IP configuration and access of sensor user interface homepage.

2. Inline Brix monitor DCM-20 mounting

The inline optical Brix monitor DCM-20 can be mounted straight into process pipe sizes of 1.5” or larger. For 1” or smaller pipe sizes and optical window wash nozzle connections, the sensor is mounted with flow cells designed by KxS Technologies.

2.1 Sensor mounting

The recommended sensor mounting position is either in a vertical or horizontal process pipe section. When a horizontal process pipe section is chosen, the sensor head is recommended in horizontal orientation, i.e. not on top nor below the process pipe. The recommended flow velocity is 1m/s (3ft/s). That translates to 70 liters per minute LPM in a 1.5” process pipe and 270LPM in a 3” pipe.

The recommended sensor mounting location is such where the sensor is accessible for maintenance and cable connection for user interface access. The standard sensor connection is with 1.5” sanitary tri-clamp (DWG No. 10119) with option for a 2.5” sanitary tri-clamp connection, Varinline® Type N DIN 11850, DN40-150 (DWG No. 10097) or Sandvik L-clamp 1.25” ISO42.2 (DWG No. 10124).

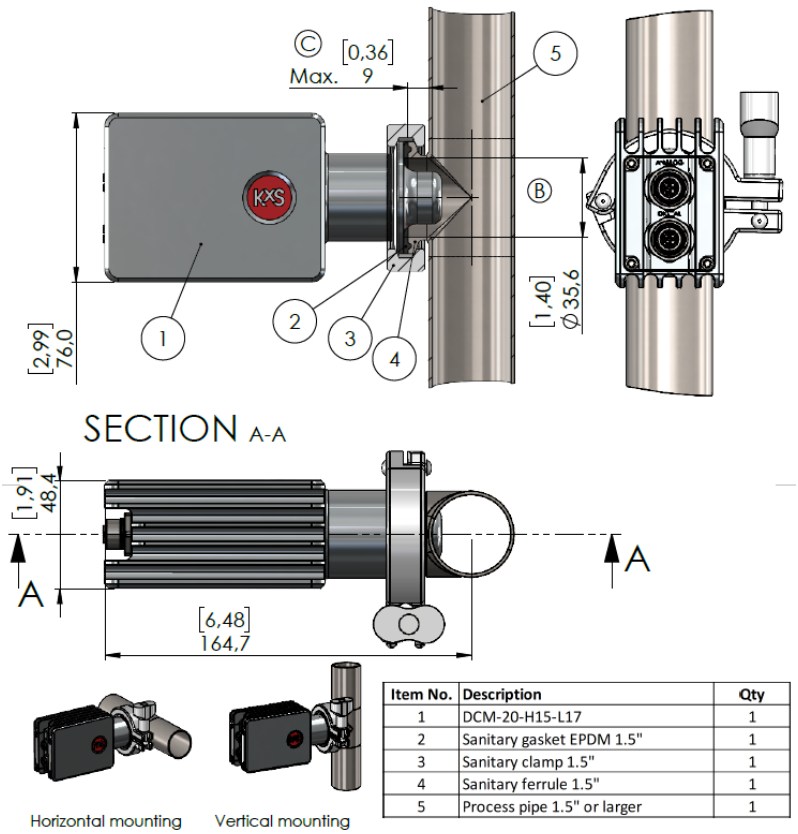

Item No.	Description	Qty
1	DCM-20-H15-L17	1
2	Sanitary gasket EPDM 1.5"	1
3	Sanitary clamp 1.5"	1
4	Sanitary ferrule 1.5"	1
5	Process pipe 1.5" or larger	1

Figure 11 Inline optical Brix monitor mounted directly in 1.5” or larger pipe sizes with a sanitary tri-clamp connection. DWG No. 10119.

2.2 Flow cell mounting

Single piece flow cells SFC are designed for 1”, 1.5”, 2”, 2.5” and 3” pipe sizes. The SFC is mounted with corresponding sanitary tri-clamp connections to the process pipe. DCM-20 inline optical Brix monitor is mounted with a 1.5” sanitary tri-clamp to the SFC. When a single piece flow cell SFC is chosen, the recommended mounting orientation is in a vertical pipe. The SFC dimensions allow self-draining of fluid when in vertical position.

Note: The single-piece flow cell is designed with no welding joints.

Note: SFC is chosen when a sanitary high-pressure clamp for process pressures up to 40 bar is required.

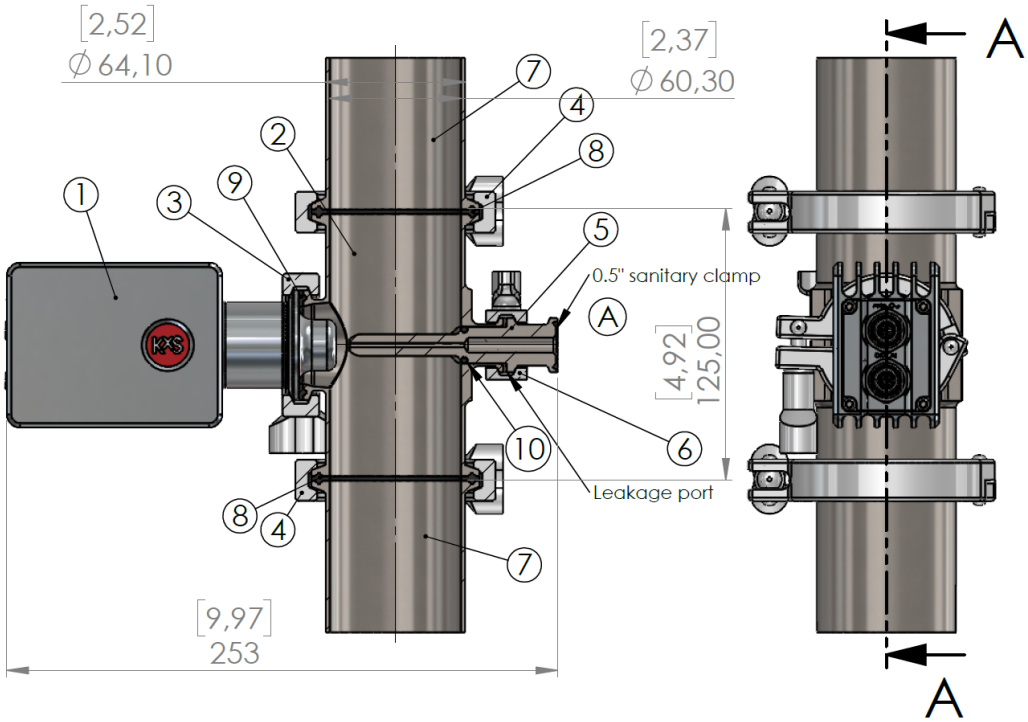

	ITEM NO.	DESCRIPTION	MATERIAL	QTY.
	1	DCM-20-H15-L17	AISI316L/EN1.4435	1
	2	SFC-H25-NC	AISI316L/EN1.4404	1
B	3	1,5" Sanitary clamp	AISI304	1
	4	2.5" Sanitary clamp	AISI304	2
	5	Wash nozzle		1
	5.1	SFCN-25-P High pressure water nozzle	AISI316L/EN1.4404	
	5.2	SFCN-25-S Steam Nozzle	AISI316L/EN1.4404	
	6	Miniclamp	AISI304	1
	7	Process piping		1
	8	2,5" Sanitary clamp gasket	EPDM	2
	9	1.5" Sanitary clamp gasket	EPDM	1
	10	O-ring 11x3	EPDM/FKM	1

Figure 12 Sensor mounting in flow cell with optional wash nozzle. DWG No. 10161.

In installations without sanitary requirements, a flange connected flow cell FFC with wash nozzle connection is available where the sensor is connected to the flow cell with 42.4 PN40 Sandvik L coupling.

Note: The flange flow cell FFC is a single-piece flow cell without welding joints.

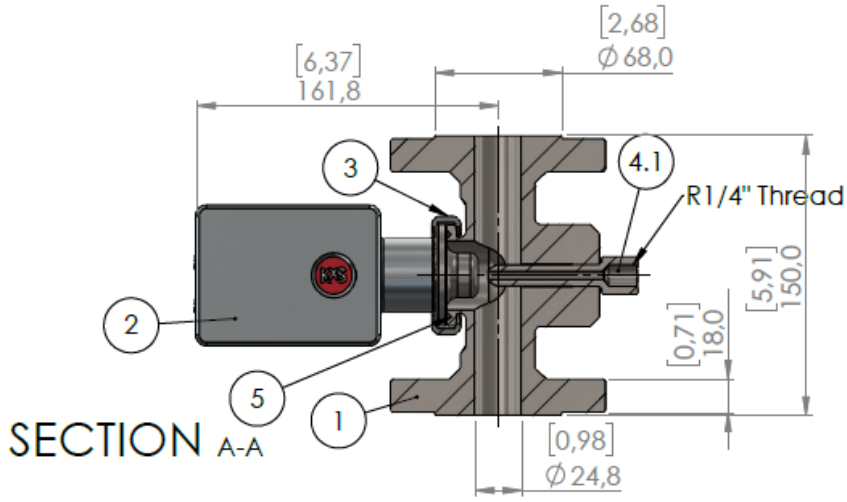

ITEM NO.	PART NUMBER	DESCRIPTION	QTY.
1	10133	Flange Flow cell DN25 PN40 Single Piece	1
2	10032	DCM-20-K42-L17	1
3	Sandvik L clamp	42.4 PN40	1
4		Wash nozzle for FFC	1
4.1	10132	Flange flow cell steam nozzle	
4.2		Flange flow cell high pressure water nozzle	
5	O-ring	4x40 NBR	1

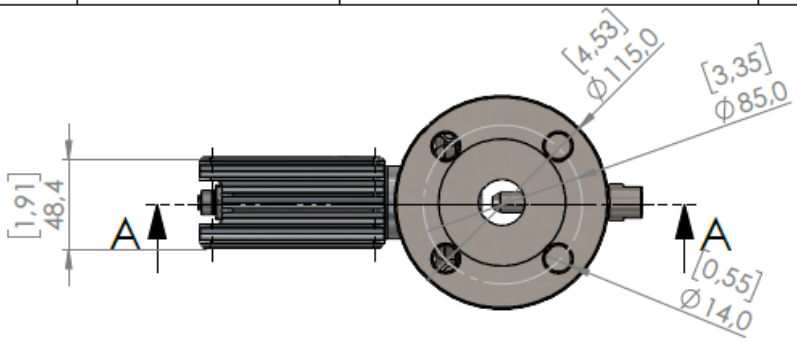

Figure 13. Flange Flow cell. DWG No. 10134.

2.3 Optical window wash nozzle mounting

The wash medium needs to be specified with either steam or high-pressure water to determine the wash nozzle model. The wash nozzle is connected to the single piece flow cell SFC through a sanitary mini clamp connection on the opposite side of the sensor.

Note: During Steam in Place SIP or Clean in Place CIP it is essential that optical window wash is activated multiple times during SIP/CIP-cycle to ensure a clean nozzle before next process sequence.

The nozzle can be removed by opening the sanitary mini clamp and pulling the nozzle out from the SFC flow cell. Sensor can also be removed by releasing the 1.5” sanitary tri-clamp.

When wash nozzle is not installed, a blind nozzle SP-10161 is mounted in the nozzle insert as shown in Fig. 16.

Note: Both wash nozzle and blind nozzle connections are 3A certified, while EHEDG certified installations are without nozzle connection in the SFC.

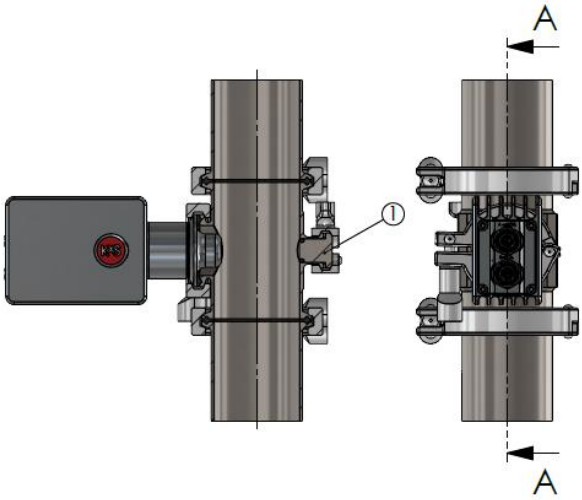

ITEM NO.	PART NUMBER	DESCRIPTION	QTY.
1	10161	Blind nozzle	1

Figure 14 Blind nozzle insert when wash nozzle not mounted. DWG No. 10164.

2.4 Wiring drawing of Modular Connection Unit system

The wiring drawing consists of all standard modules for power supply, wiring, control, and converter modules. Components listed from bottom to up: 60W power supply unit 110-240V in 24V out SP-9400, limit value switches with analog mA input and relay output SP-9700, wire connection unit for 100-240V input, analog signal wiring output unit, patch panel for digital communication 4 wire free-end connection SP-9330, wire connection unit for 24VDC input and output, industrial ethernet switch SP-9320, digital communication protocol converter SP-9800.

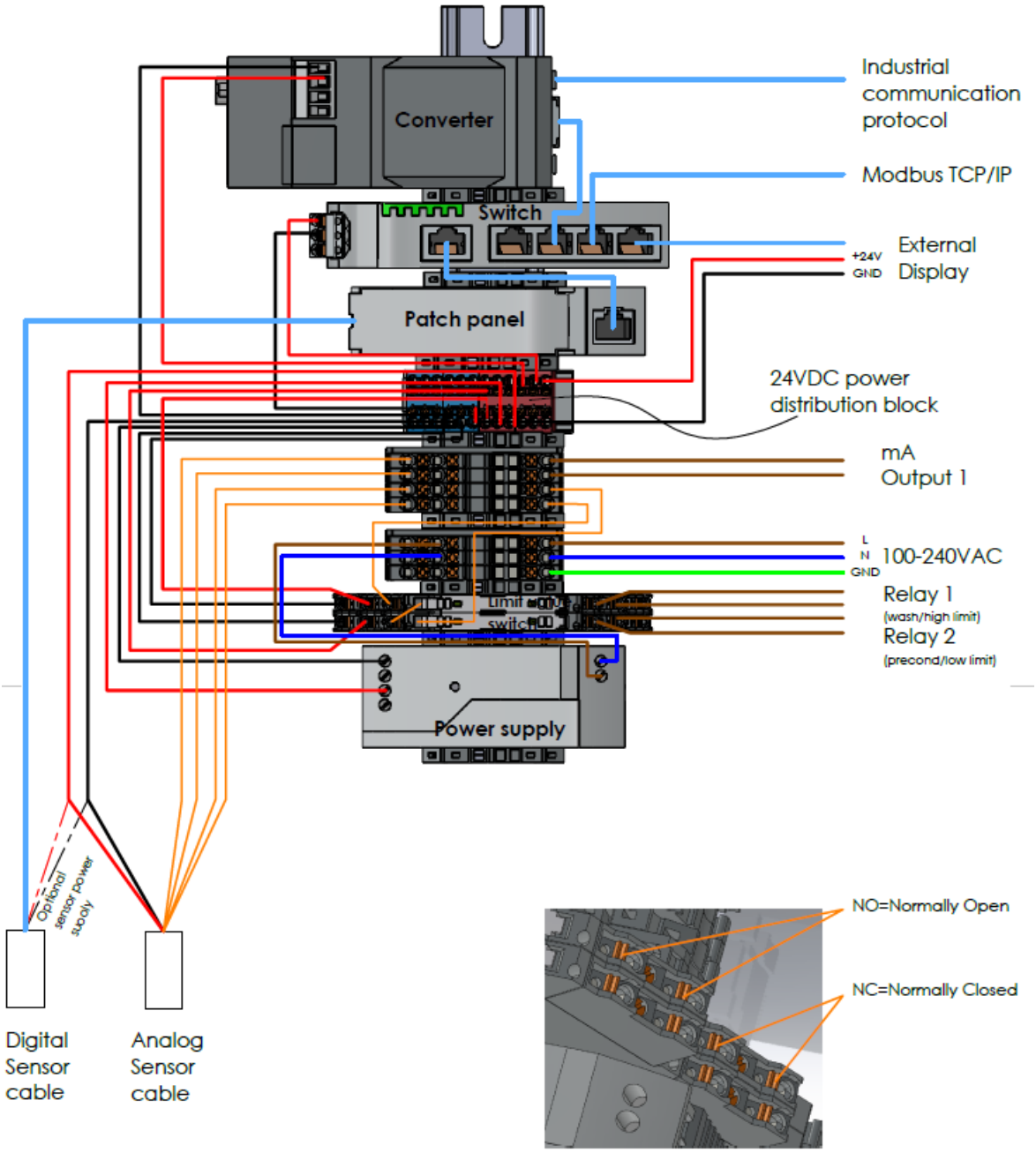

Figure 15 Wiring drawing of modules in MCU. DWG No. 10178.

3. Prism wash systems

Some applications in the food & beverage and chemical industries are known to cause fouling of the sensor optical window. Fouling is often caused by properties in the liquid. A typical measurement behavior in the event of optical window fouling is an upward trending Brix concentration measurement over time.

3.1 Sensor optical window wash

The inline optical Brix monitor DCM-20 can be equipped with a wash nozzle integrated in the Single-piece Flow Cell SFC for applications that requires an automatic wash of the optical window. The SFC design accommodates connections to process pipe sizes of 1”, 1.5”, 2”, 2.5” and 3”. The wash nozzles are designed for either high pressure water or steam.

3.1.1 High pressure water wash system

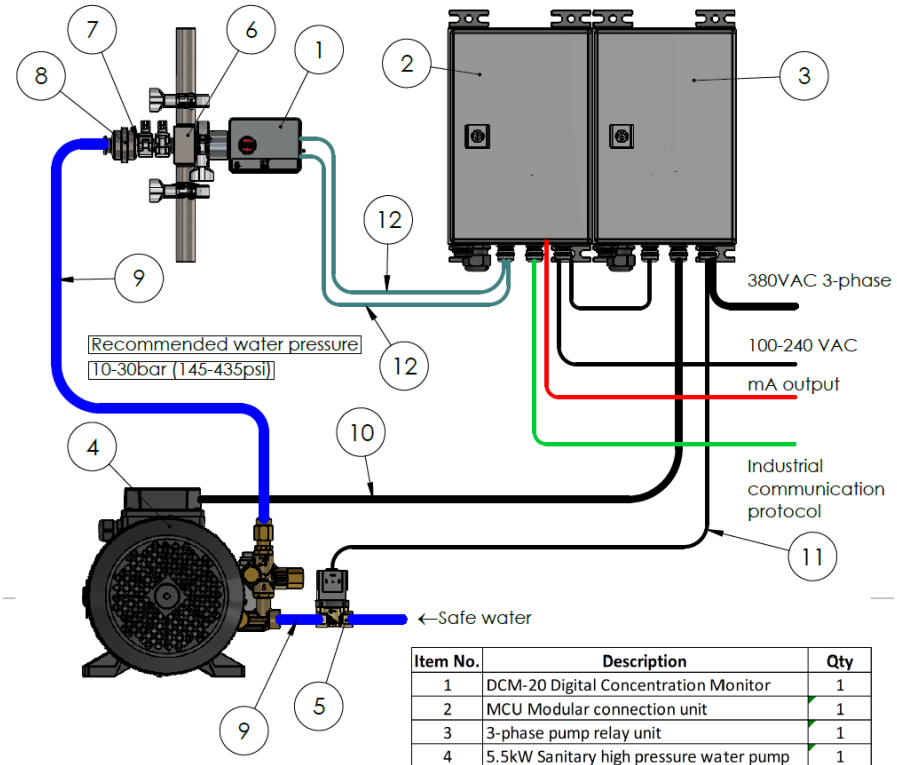

Item No.	Description	Qty
1	DCM-20 Digital Concentration Monitor	1
2	MCU Modular connection unit	1
3	3-phase pump relay unit	1
4	5.5kW Sanitary high pressure water pump	1
5	0.5" Sanitary solenoid valve (Acc. 3-A, 53-)	1
6	SFC flow cell	1
7	High pressure water nozzle	1
A 8	0.5" Sanitary Check valve (acc. 3-A, 58-)	1
9	0.5" Sanitary Water line (acc. 3-A, 605-)	1
10	5x1,5mm2 cable	1
11	3x1.5mm2 cable	1
12	SP-9000-... Sensor cable	1-2

Figure 16 DCM-20 High pressure water system. DWG No. 10177.

3.1.2 Steam wash system

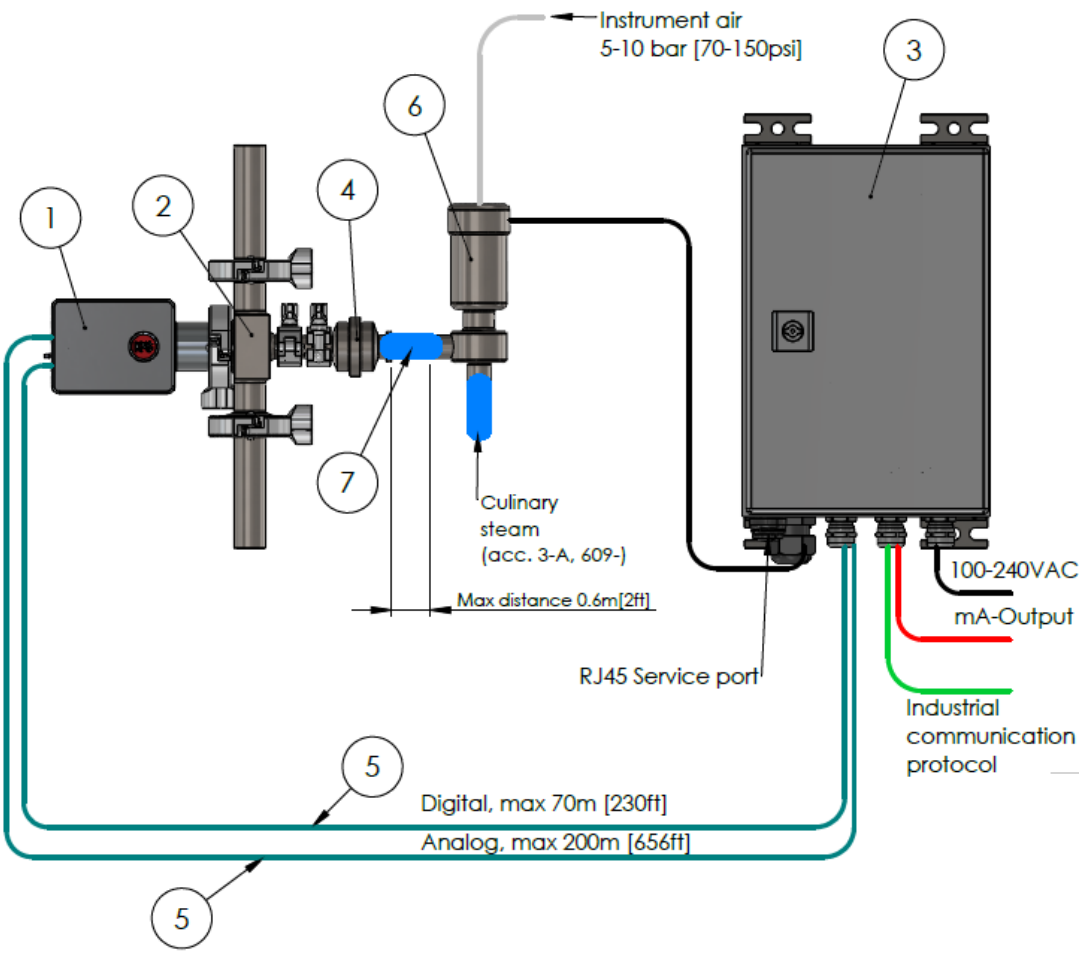

ITEM NO.	DESCRIPTION	QTY.
1	DCM-20-H15	1
2	Single Piece Flow cell with steam nozzle	1
3	Modular Connection Unit (MCU)	1
4	0.5" Sanitary check valve (acc. 3-A, 58-)	1
5	Sensor cable	1-2
6	0.5" Sanitary valve with solenoid valve (acc. 3-A, 53-)	1
7	0.5" Sanitary piping (acc. 3-A, 605-)	1

Figure 17 DCM-20 steam wash system. DWG No. 10168.

3.2 Recommended wash settings:

In limited demanding applications either high pressure water or steam wash medium is available for cleaning of the optical window. The recommended wash settings and times given in Fig. 20.

Wash system parameters setting in DCM-20					
	Maximum above process	Maximum total pressure	Wash time	Recovery time	Wash interval
High pressure water	30 bar above process pressure	70 bar	10 sec	20-30 sec	10-20 min
Steam	3 bar above process pressure	6 bar	3 sec	20-30 sec	20-30 min

Figure 18 Wash medium pressure and time settings.

3.3 Modular Connection Unit for Wash Systems

The optical window wash is functional through one of the sensor analog 4-20mA outputs. The sensor mA wiring is connected to a Modular Connection Unit MCU for Wash Systems. The unit consists of two modules: One or two analog limit value switches SP-9700 and 24VDC power supply SP-9400 in a rail mounted stainless steel enclosure assembly SP-8000 with IP66, NEMA 4X category. The wiring drawing presented in section 2.4 Fig.17.

The limit value switches SP-9700 are configured with physical DIP switches to close or open the relay per user selection while the sensor wash function is active. The chosen DIP switch schedule with corresponding sensor analog mA output for precondition and wash activation is as follows:

Precondition: Module 1 DIP switches **5, 6, 0** activated 'ON' (4.8mA).

Wash: Module 2 DIP switches **3, 7, 0** activated 'ON' (6.8mA).

Figure 19 DIP switch configuration

Figure 20 Limit value switch with changeover relay output for monitoring analog limit values from the sensor output. The sensor wash is activated at a mA value that corresponds to the limit value switch schedule with DIP switches activated. The relay closes or opens per user selection.

4. Calibration and configuration

The inline optical Brix monitor DCM-20 is factory calibrated for refractive index units RIU according to NIST traceable procedures.

The DCM-20 is pre-calibrated for Brix according to ICUMSA references. The refractive index unit RIU and Temperature are used to convert the measurement to Brix. The factory Brix calibration is automatically temperature compensated.

Configuration and calibration parameter changes are defined in the user interface on a web browser on a computer, external display, or mobile device. Access to the user interfaces is described in section *1.5 User Interface*.

4.1 User interface homepage

The sensor user interface is accessed as described in section 1.5. The homepage displays real time Brix concentration measurement values, process temperature, and sensor serial number. In addition, the sensor status is visible: *Normal Operation* when liquid is in contact with the optical window, *No Sample* when process pipe empty or no liquid on the optical window *Optical Window Wash* when the wash system is active as user defined.

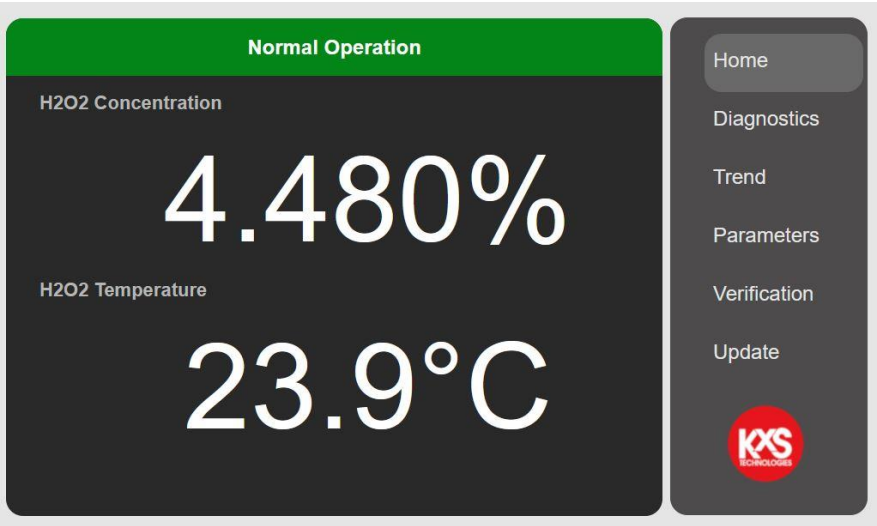

Figure 21 User interface homepage with real-time measurement values.

4.2 Diagnostics

The Optical image, measurements, and sensor internal diagnostics are useful in analyzing the sensor performance and application functionality.

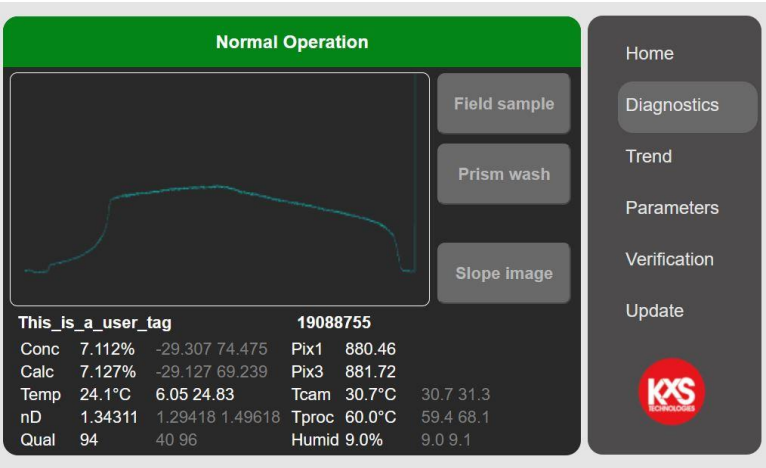

Figure 22 Diagnostics with optical image, measurements, and sensor internal diagnostics.

4.3 Trend

Realtime trend of concentration and temperature values.

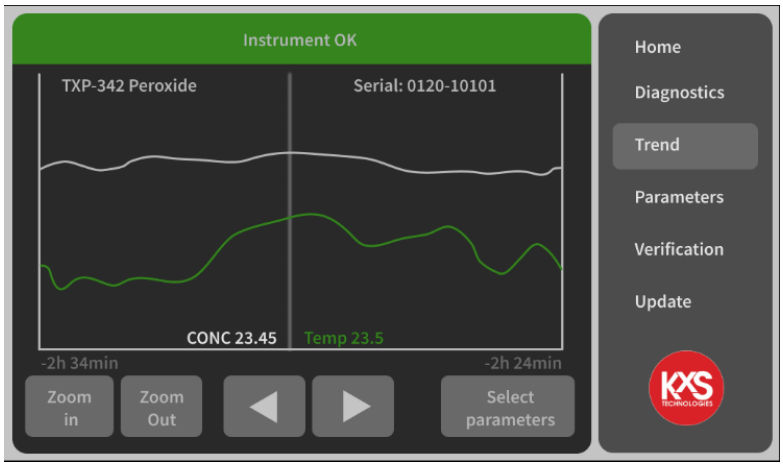

Figure 23 Continuous measurement trend.

4.4 Parameters

4.4.1 Calibration parameters

In the user interface the mA configuration is found on page *Parameters* and *Output*. The mA-output is user configurable for Brix, Temp, diagnostics and Wash (for optical window). The range of chosen measurement value is user configurable to correspond the analog 4-20mA range.

The sensor calibration is configured in three layers. Each layer is described by a second degree 3x3 matrix for both concentration and temperature dependency.

The factory camera pixel to refractive index unit RIU calibration is defined in page nD-parameters. The factory set a-parameters are sensor individual and must not be altered unless a sensor RIU calibration is performed.

The Chemical calibration RI to Brix/Conc%/Oechsle is set in page C-parameters. The 3x3 matrix describes the non-linear relationship of CONC vs RIU/Temp.

Figure 24 Sensor calibration parameter settings.

The parameter values C1-C9 are dialed by pressing respective cell. In the active cell a new parameter value is entered and confirmed by pressing *Save & Exit*.

Note! For Brix measurements the c-values are factory set and need no change. In the event the output Brix reading needs a field adjustment vs. references, the sensor measurement is adjusted in page F-parameters with a bias adjustment.

The Field adjustment matrix is defined in the F-parameters matrix.

4.4.2 Output

The mA output function is user configured in the user interface section *Parameters/Output* in the drop-down menu. The output functions available are Concentration, Temperature, Quality of optical image, refractive index unit nD, diagnostics, automatic Wash functions of the optical window, and measurement low/high limit alarms.

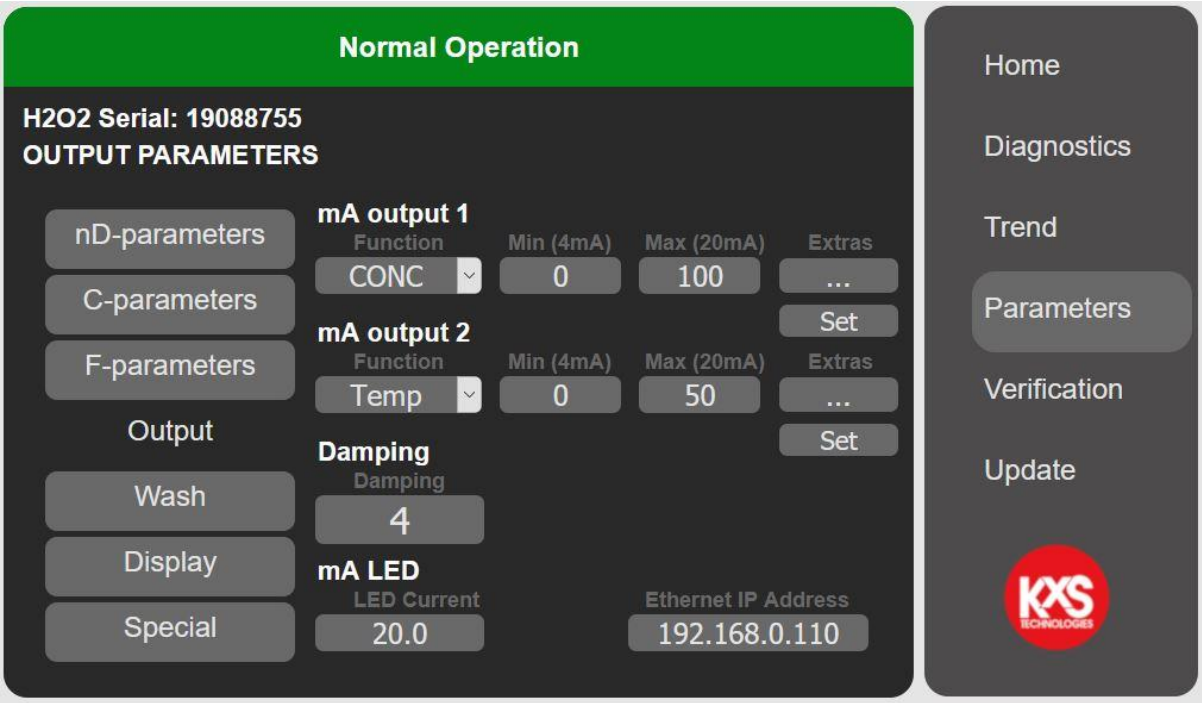

Figure 25 User configurable analog measurement output settings.

4.4.3 Configuration of low and high alarms

Low and high alarm limit values are user selectable for measurements or diagnostics. The alarm limit settings are configured in Parameters/Output/Extras.

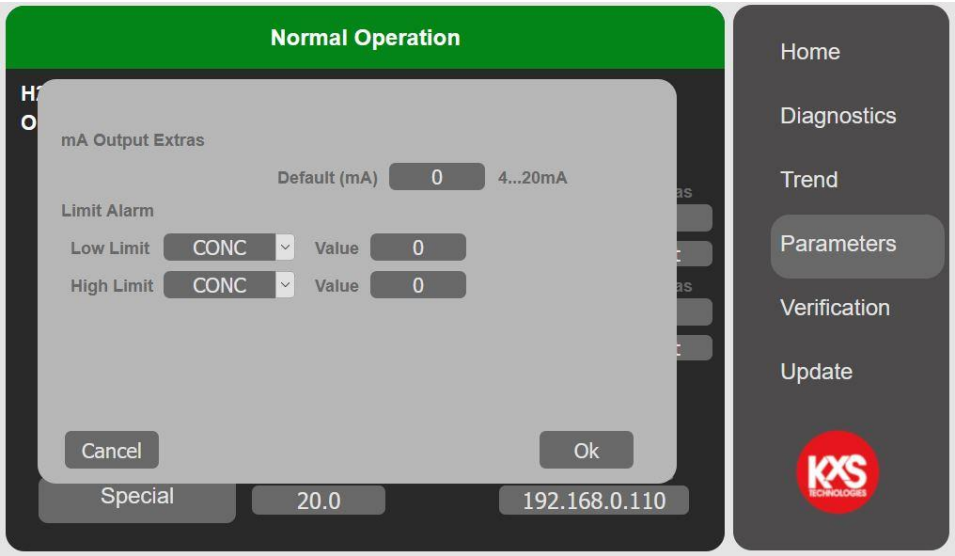

Figure 26 User selectable alarm limit function.

Simultaneously corresponding physical DIP switches are activated 'ON'. When both low and high alarms are used, 2x limit value switches SP-9700 are connected in serial per wiring drawing in section 2.4, Fig. 17.

Low alarm: Module 1 DIP switches **3, 5, 6, 9, 0** activated 'ON' (5.2mA).

High alarm: Module 2 DIP switches **3, 7, 0** activated 'ON' (6.8mA).

Figure 27 Physical DIP switch configuration for Low alarm functions. DIP switches 3, 5, 6, 9, 0 activated 'ON'

Figure 28 Physical DIP switch configuration for High alarms functions. DIP switches 3, 7, 0 activated 'ON'

4.4.4 Configuration of optical window wash

The optical window wash is functional through one of the sensor analog 4-20mA outputs. Wash times can be set in the user interface and controlled by external relay units.

The configuration of wash parameters is found in the user interface on page *Parameters* and *Outputs*. For the chosen mA output (1 or 2), *Function* opens a drop-down menu where *Wash* is selected and activated by pressing *Save & Exit*.

The wash cycle is configured on page *Parameters* and *Wash*. The user selectable wash time sets the time in seconds for an open wash relay. Recommended wash cycles depending on the wash medium is described in section *3.2 Recommended wash settings*.

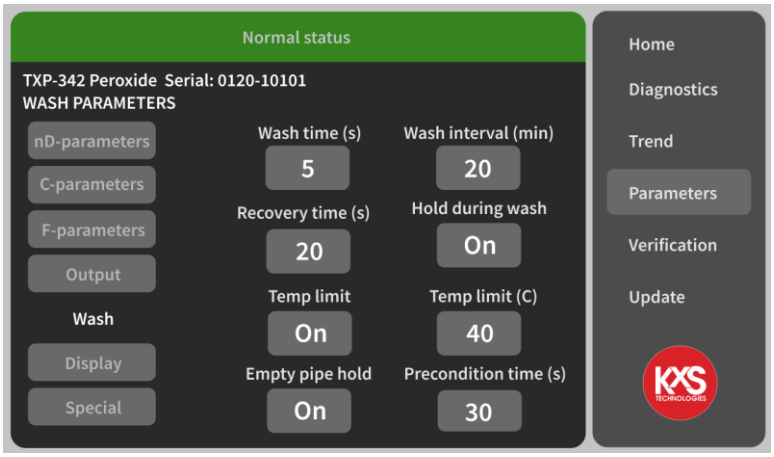

Figure 29 Optical window wash function and time settings.

The recovery time describes the time in seconds between a closed wash cycle and activation of the CONC concentration output value. The CONC concentration output value can be put on hold during wash by selecting *On* in *Hold during wash*. With an activated Hold during wash the last CONC concentration output value is held when the wash cycle begins.

4.4.5 Display

User selectable engineering units Brix, %, g/L, R.I. in a drop-down menu are available for display of concentration and temperature. Number of decimals for the display unit is user selectable 1-6. Note that the displayed measurement value is always dictated by the C-parameters setup.

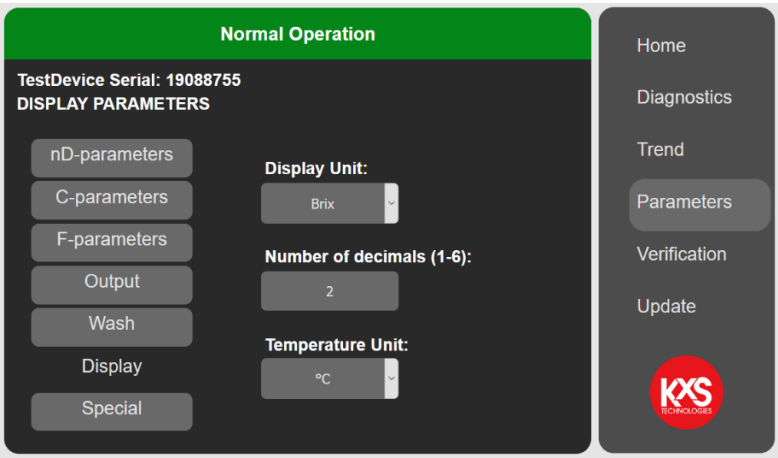

Figure 30 Displayed engineering units for concentration and temperature.

5. Digital Modbus TCP configuration

The DCM-20 digital output signal is designed with Ethernet communication in a Modbus TCP protocol. The protocol uses by default **Port 502** as local port in the server.

When configuring programmable logic controllers PLC, the DCM-20 measurement quantities are found in defined registers and addresses. The registers are defined in the Modbus Holding register with Function code 03. Sensor specific measurement quantities found in Register numbers and addresses as listed below:

Measurement quantity	Register number	Address	Data type
Calculated nD value	30021	20	Float
Final concentration value	30023	22	Float
Process temperature	30025	24	Float
Calculated concentration value	30031	30	Float

6. Specifications of modules

The power and communication modules in the Modular Connection Unit MCU are by the third-party module manufacturer classified up to ATEX Zone 2, Class 1 Div. 2 hazardous area category. All modules are with DIN rail mounting and can optionally be mounted in a stainless-steel enclosure SP-8000 with protection category IP66, NEMA 4X certified by the enclosure manufacturer.

6.1 Modular Connection Unit MCU Enclosure

Stainless steel compact enclosures 1.4301 (AISI 304) including mounting plate. The door is of Stainless steel, all-round foamed-in PU seal. Protection category IP 66. The manufacturer provides an EU Declaration of Conformity and UL Standard(s) for Safety.

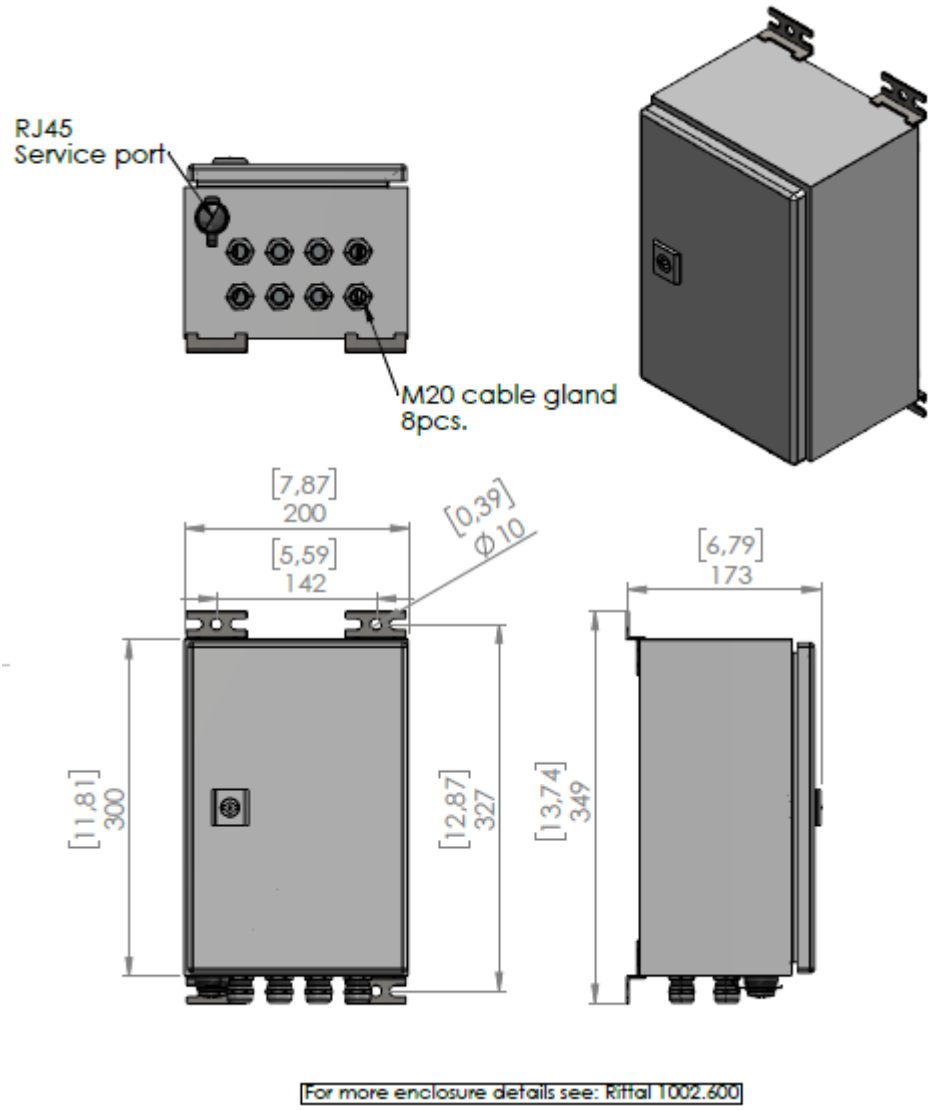

Figure 31 Dimensional drawing of Modular Connection Unit enclosure DWG No. 10179.

6.2 Display options for User Interface access

KxS Technologies offers options for user interface displays. The user interface features and functions are identical regardless which option is chosen. Product certificates of modules and displays are available per the third-party manufacturer.

6.2.1 A computer with display connected with Ethernet cable

The sensor cable is assembled to an RJ-45 connector according to the color coding given in Section 1.2 Fig.4. The SP-9310 RJ-45 connector is with corresponding color coding of mode A. The cable is connected to the computer RJ-45 port, or USB-C port when a RJ-45 to USB-C adapter is used. The sensor user interface is accessed as described in section 1.5.

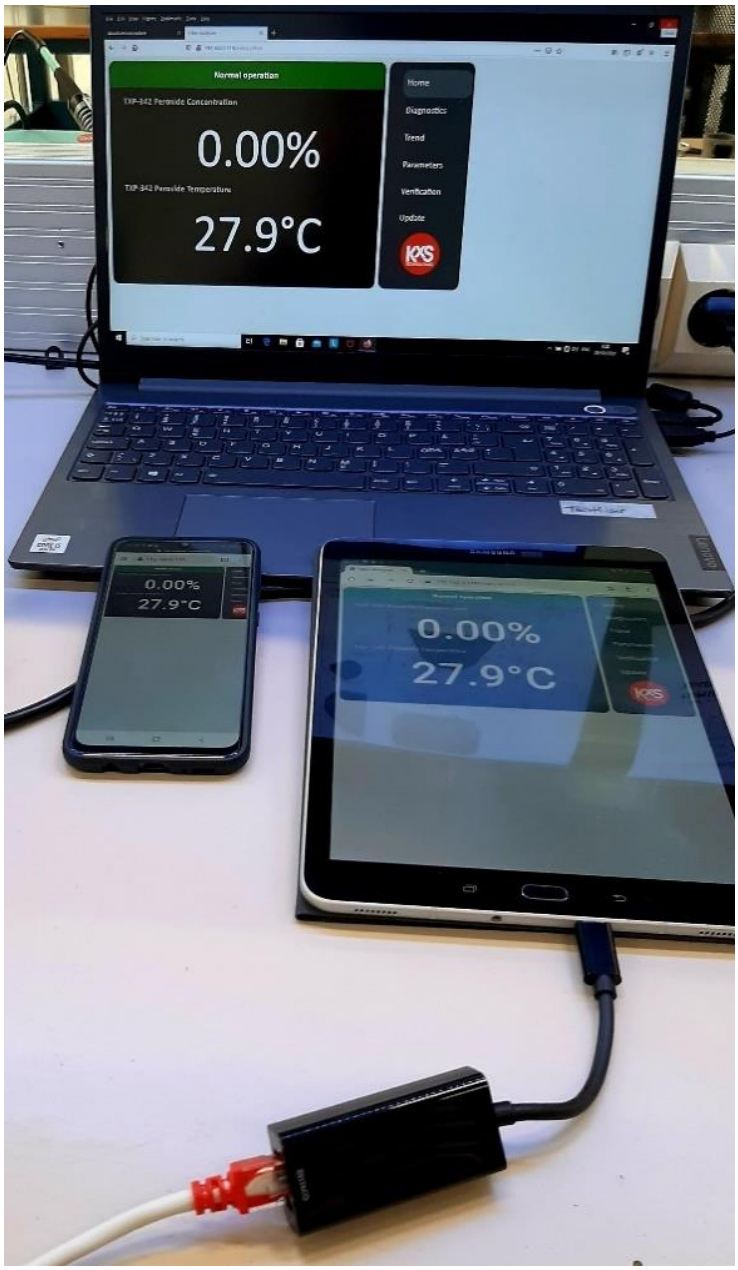

Figure 32 Computer or mobile device used as user interface.

6.2.2 WLAN for remote access with Computer or mobile device

The Modular Connection Unit MCU stainless steel enclosure can be equipped with a WLAN wireless module SP-9600 Fig. 17 for wireless connection to a computer or mobile device with corresponding WLAN features. The WLAN wireless module operates with 24VDC power input and holds an RJ-45 port for Ethernet cable connection from the Industrial Ethernet Switch SP-9320 placed inside the MCU enclosure.

Figure 33 WLAN access point, client with two internal antennas (MIMO) for single-hole mounting, IP54, WLAN 802.11 a, b, g, n, frequency: 2.4 GHz, 5 GHz (incl. DFS channels), connections: COMBICON 9 ... 32 V DC, RJ45: for LAN, web, http/https, Command Line Interface

Dimensions

Width	62.8 mm
Height	36.5 mm
Depth	113.2 mm
Note on dimensions	Outside dimensions

Ambient conditions

Ambient temperature (operation)	0 °C ... 60 °C
Ambient temperature (storage/transport)	-40 °C ... 85 °C
Permissible humidity (operation)	5 % ... 95 % (non-condensing)
Permissible humidity (storage/transport)	5 % ... 95 % (non-condensing)
Air pressure (operation)	800 hPa ... 1080 hPa (up to 2000 m above sea level)
Air pressure (storage/transport)	660 hPa ... 1080 hPa (up to 3500 m above sea level)
Degree of protection	IP54

Note	Degree of protection when installed

Wireless interface

Designation	Wireless LAN
Antenna connection method	(Internal)
Wireless standard	IEEE 802.11
	a
	b
	g
	n
Frequency band	2.4 GHz
	5 GHz
Transmission power	max. 20 dBm (EIRP)
Number of wireless interfaces	1 IEEE 802. 11 a/b/g/n
Wireless modules that can be connected	10 (In Access Point mode max. 2 SSIDs)

Functions

Operating modes	Access Point / Client Adapter / Repeater
Configuration	Web-based management, automated CLI
Quality of service (QoS)	Yes
Security	802.11i
	WPA PSK (preshared key)
	WPA2
	AES
	TKIP
	MAC filter
	Supports 802.1X/RADIUS

Wireless card

Number	1
Type	IEEE 802.11 a/b/g/n 2.4 GHz and 5 GHz to 300 Mbps

Assembly instructions	Permanently installed

Antenna

Assembly instructions	Internal antenna
Number	2
Connection method	permanently installed
Note on the connection method	MIMO
Gain	5 dBi

Ethernet interface

Interface	Ethernet (RJ45)
Number of interfaces	1
Connection method	RJ45
Note on the connection method	Auto negotiation and autocrossing
Transmission speed	10/100 Mbps
Transmission physics	Copper
Transmission length	100 m (per segment)

Power supply for module electronics

Connection technology	COMBICON
Connection method	Push-in spring connection
Designation	1966101 FMC 1,5/ 3-STF-3,5
Number of positions	3
Cross section range AWG	24 ... 16 (Use copper wires rated 75° C (UL))
Note on the connection method	Recommended conductor cross section: 0.75 mm²
	Recommended ferrule: connection length 10 mm
	Recommended crimping pliers: trapezoidal or square
Supply voltage	24 V DC (SELV)
Supply voltage range	18 V DC ... 32 V DC (PELV/SELV)
	9 V DC ... 32 V DC (PELV/SELV (as of HW version 05))
Supply current	typ. 120 mA (at 24 V DC)

Current consumption	max. 250 mA (at 18 V DC)
	max. 400 mA (at 9 V DC)

Connection data

Designation	1966101 FMC 1,5/ 3-STF-3,5
Connection method	Push-in spring connection
Conductor cross section solid min.	0.2 mm²
Conductor cross section solid max.	1.5 mm²
Conductor cross section flexible min.	0.2 mm²
Conductor cross section flexible max.	1.5 mm²
Conductor cross section AWG min.	24
Conductor cross section AWG max.	16
Stripping length	10 mm

General

Housing material	Polycarbonate, PC
Material base plate	Die-cast zinc, nickel-plated
Mounting type	Single-hole mounting
Color	black
Net weight	370.2 g
Degree of pollution	2
Wireless licenses	EU, more countries in e-shop
Wireless licenses	Belgium
	Bulgaria
	Denmark
	Germany
	Estonia
	Finland
	France

	Greece
	Great Britain
	Ireland
	Italy
	Latvia
	Liechtenstein
	Lithuania
	Luxembourg
	Malta
	Netherlands
	Norway
	Austria
	Poland
	Portugal
	Romania
	Sweden
	Switzerland
	Slovakia
	Slovenia
	Spain
	Czech Republic
	Hungary
	Cyprus (rep.)
	China
	Japan
	South Korea
	Thailand

	Brazil
Note	Degree of protection when installed

Standards and Regulations

Mechanical tests	Shock in acc. with EN 60068-2-27/IEC 60068-2-27 30g, 11 ms half-sine shock pulse
	Vibration resistance in acc. with EN 60068-2-6/IEC 60068-2-6 5g, 10 ... 150 Hz
	Continuous shock according to EN 60068-2-27/IEC 60068-2-27 10g, 16 ms, 6000 shocks
	Broadband noise according to EN 60068-2-64 Category 1, Class A
Standards/regulations	EN 61000-4-2
Contact discharge	± 4 kV
Indirect discharge	± 6 kV
Standards/regulations	EN 61000-4-3
Frequency range	80 MHz ... 1000 MHz
Test field strength	10 V/m
Frequency range	1000 MHz ... 6000 MHz
Test field strength	3 V/m
Standards/regulations	EN 61000-4-4
Comments	±2.2 kV
Standards/regulations	EN 61000-4-5
Signal	± 0.5 kV (symmetrical)
	± 1 kV (asymmetrical)
Standards/regulations	EN 55022
Test result	Class B
Standards/regulations	EN 61000-4-6
Frequency range	0.15 MHz ... 80 MHz
Voltage	10 V
Overvoltage category	none

Environmental Product Compliance

REACh SVHC	Lead 7439-92-1

6.2.3 Industrial touch panel display specifications

An external industrial display SP-9500 is available with a panel mount design and 7” touch display for user interface and measurement reading purposes with IP20 protection category. The display is powered with 24VDC. The display with a RJ-45 port is used for the sensor Ethernet cable connection.

The touch panel unit can display four sensors by selecting respective sensor url line ‘active’ in settings of the display user interface.

Figure 34 Panel mount external 7” touch display with connectivity of 4 sensors. Touch panel with 17.8 cm/7" TFT-display (Projective-capacitive (PCAP)), 1280 x 800 pixel(s) (WXGA), 16.7 million colors, Arm® Cortex®-A53, 4x 1.2 GHz, 2x USB host 2.0, 1 x Ethernet (10/100 Mbps), RJ45, Yocto/Linux and user software: Chromium Browser. (bus system: without)

Dimensions

Outer dimensions: width, height, depth	186 mm x 147 mm x 6 mm (Dimensions of the front plate)
Installation dimensions: width, height, depth	175 mm x 136 mm x 45 mm (Installation cutout)

Display

Display type	17.8 cm/7" TFT
Screen resolution	1280 x 800 Pixel(s) (WXGA)
Touch technology	Projective-capacitive (PCAP)
Brightness	500 cd/m² typical (adjustable)
Backlighting	LED
Display backlight MTBF	50000 h
Colors	16.7 million colors
Reading angle left	85 °

Reading angle right	85 °
Reading angle top	85 °
Reading angle bottom	85 °

Computer data

Processor	Arm® Cortex®-A53, 4x 1.2 GHz
Operating system	Yocto/Linux
User software	Chromium Browser
RAM	1 GB LPDDR3
Mass storage	Flash eMMC, 8 GB
Network	1 x Ethernet (10/100 Mbps), RJ45
Interfaces	2x USB Host 2.0
Bus system	without
Optional interfaces	Without optional interface
Slots	1x microSD
Realtime clock	Integrated (battery backup)

General

Material front plate	Aluminum (natural anodized)
Housing material	Steel sheet, zinc-plated
Mounting type	Front installation
Weight (GRP)	760 g

Ambient conditions

Degree of protection	IP65 (front), IP20 (back)
Ambient temperature (operation)	0 °C ... 50 °C
Ambient temperature (storage/transport)	-25 °C ... 70 °C
Permissible humidity (operation)	20 % ... 85 % (non-condensing)
Permissible humidity (storage/transport)	20 % ... 85 % (non-condensing)
Vibration (operation)	DIN EN 60068-2-6

Shock	DIN EN 60068-2-27

Device supply

Supply voltage	24 V DC
Supply voltage range	18 V ... 30 V
Typical current consumption	0.4 A
Power supply unit	24 V DC ±20 %

Standards and Regulations

Shock	DIN EN 60068-2-27
Vibration (operation)	DIN EN 60068-2-6

Environmental Product Compliance

REACh SVHC	Lead 7439-92-1

6.2.4 Industrial Panel PC display with IP65 protection

When an enclosure for the display is required, an external industrial 15” display SP-9540 is available with a panel PC of IP65 protection category. The panel PC holds an RJ-45 port for Ethernet cable connection from the Industrial Ethernet Switch SP-9320. When display is powered up, opt for the configuration page during display start-up. On the display URL page set the sensor default IP address 192.168.10.20.

Figure 35 Industrial panel PC display with IP65 protection category. Full IP65 industrial PC with Intel® Pentium® N4200 processor and multi-touch capacitive full HD display. Designed for VESA, pole, or arm mounting.

Note

Utilization restriction	EMC: class A product, see manufacturer's declaration in the download area

Display

Screen resolution	1920 x 1080 Pixel(s) (Full HD)
Touch technology	Projective-capacitive (PCAP)
Backlighting	LED
Display backlight MTBF	> 50000 h
Colors	16.2 million colors

Computer data

Processor	Intel® Pentium® N4200 processor 1.10/2.50 GHz
Operating system	without operating system
	Windows® 10 IoT Enterprise LTSC 2019 (64-bit), Multi-language
RAM	4 GB DDR3 SODIMM
	8 GB DDR3 SODIMM

Mass storage	Configurable
Network	2x Ethernet (10/100/1000 Mbps), RJ45
Interfaces	1x COM (RS-232/422/485)
	2x USB 2.0
	2x USB 3.0
Realtime clock	Yes (battery-backed)
Service life of battery	5 years (typical)

General

Note	Assembly instruction: Arm/pole mount [A24] option is required to use the stack light, pushbuttons, and pole mounting.
	Recommendation
Weight (GRP)	4.6 kg (15.6 in. display)
	5.4 g (18.5 in. display)

Ambient conditions

Degree of protection	IP65
Ambient temperature (operation)	0 °C ... 50 °C (with mSATA)
Ambient temperature (storage/transport)	-40 °C ... 70 °C
Permissible humidity (operation)	5 % ... 95 % (non-condensing)
Permissible humidity (storage/transport)	5 % ... 95 % (non-condensing)
Vibration (operation)	1g with SSD, 0.5g with HDD, according to EN 60068-2-6
Shock	15g, 11 ms in accordance with IEC 60068-2-27

Device supply

Supply voltage	24 V DC
Power supply unit	24 V DC ±20 %

Standards and Regulations

Shock	15g, 11 ms in accordance with IEC 60068-2-27
Vibration (operation)	1g with SSD, 0.5g with HDD, according to EN 60068-2-6

6.3 Limit value switch specifications

Figure 36 Limit value switch. Universally configurable limit value switch with PDT relay output and plug-in connection technology for switching analog limit values. Configurable via DIP switch or software. Push-in connection technology, standard configuration.

Dimensions

Width	6.2 mm
Height	109.81 mm
Depth	119.2 mm

Ambient conditions

Ambient temperature (operation)	-40 °C ... 70 °C
Ambient temperature (storage/transport)	-40 °C ... 85 °C
Permissible humidity (operation)	5 % ... 95 % (non-condensing)
Degree of protection	IP20 (not assessed by UL)
Noise immunity	EN 61000-6-2 When being exposed to interference, there may be minimal deviations.

Input data

Configurable/programmable	Yes
Voltage input signal	0 V ... 10 V (via DIP switch)
	0 V ... 12 V (can be set via software)
Current input signal	0 mA ... 20 mA (via DIP switch)

	0 mA ... 24 mA (can be set via software)
max. input voltage	12 V
Max. input current	24 mA
Input resistance of voltage input	> 120 kΩ
Input resistance current input	approx. 50 Ω (+ 0.7 V for test diode)

Switching output

Output name	Relay output
Contact type	1 PDT
Contact material	$AgSnO_2$, hard gold-plated
Maximum switching voltage	250 V AC
	30 V DC
	240 V AC (UL)
Limiting continuous current	6 A AC
	4 A DC
Min. switching current	100 mA (12 V DC)
Mechanical service life	2x 10^7 cycles
Setting range of the response delay	0 s ... 10 s (can be set freely via software)
Internal hysteresis	can be set freely via software
Max. switching current	6 A AC (250 V AC)
	4 A DC (30 V DC)

Power supply

Nominal supply voltage	24 V DC
Supply voltage range	9.6 V DC ... 30 V DC (The DIN rail bus connector (ME 6,2 TBUS-2 1,5/5-ST-3,81 GN, Order No. 2869728) can be used to bridge the supply voltage. It can be snapped onto a 35 mm DIN rail according to EN 60715))
Typical current consumption	40 mA (12 V DC)
	20 mA (24 V DC)

Power consumption	≤ 0.5 W

Connection data

Connection method	Push-in connection
Stripping length	10 mm
Conductor cross section solid	0.2 mm² ... 2.5 mm² (with ferrule)
	0.14 mm² ... 2.5 mm² (without ferrule)
Conductor cross section flexible	0.14 mm² ... 2.5 mm²
Conductor cross section AWG	24 ... 12 (flexible)

General

No. of channels	1
Maximum transmission error	0.1 % (of final value)
Maximum temperature coefficient	0.01 %/K
Switching point accuracy	< 0.1 %
Status display	Yellow LED (switching output)
Electrical isolation	Reinforced insulation in accordance with IEC 61010-1
Overvoltage category	II
Degree of pollution	2
Rated insulation voltage	300 V (effective)
Test voltage, input/output/supply	3 kV (50 Hz, 1 min.)
Electromagnetic compatibility	Conformance with EMC directive
Noise emission	EN 61000-6-4
Noise immunity	EN 61000-6-2 When being exposed to interference, there may be minimal deviations.
Color	gray
Housing material	PBT
Mounting position	any
Assembly instructions	The T connector can be used to bridge the supply voltage. It can be snapped onto a 35 mm DIN rail according to EN 60715.

Fire protection for rail vehicles (DIN EN 45545-2) R22	HL 1 - HL 2
Fire protection for rail vehicles (DIN EN 45545-2) R23	HL 1 - HL 2
Fire protection for rail vehicles (DIN EN 45545-2) R24	HL 1 - HL 2

Standards and Regulations

Electromagnetic compatibility	Conformance with EMC directive
Noise emission	EN 61000-6-4
Designation	GB Standard
Standards/regulations	GB 3836.1
	GB 3836.8
Electrical isolation	Reinforced insulation in accordance with IEC 61010-1

Conformance/approvals

Designation	CE
Identification	CE-compliant
Designation	ATEX
Identification	Ξ II 3G Ex ec ic nC IIC T4 Gc
Certificate	BVS 18 ATEX E 071 X
Designation	IECEx
Identification	Ex ec ic nC IIC T4 Gc
Certificate	IECEx BVS 18.0060X
Designation	CCC / China-Ex
Identification	Ex nA ic IIC T4 Gc
Certificate	NEPSI GYJ20.1319X
Designation	UL, USA/Canada
Identification	UL 508 Listed
	Class I, Div. 2, Groups A, B, C, D T4A

	Class I, Zone 2, Group IIC T4A
Designation	Shipbuilding approval
Certificate	DNV GL TAA000021E
Temperature	B
Humidity	B
Vibration	A
EMC	A
Enclosure	Required protection according to the Rules shall be provided upon installation on board

Environmental Product Compliance

REACh SVHC	Lead 7439-92-1
China RoHS	Environmentally Friendly Use Period = 50 years
	For details about hazardous substances go to tab “Downloads”, Category “Manufacturer's declaration”

6.4 Sensor M12 cable specification

Dimensions

Length of cable	10 m

Ambient conditions

Degree of protection	IP65
	IP67
Ambient temperature (operation)	-25 °C ... 90 °C (M12 connector)

General data

Note	Further products with variable cable type and variable cable length can be found in the accessories section
Rated current at 40°C	0.5 A
Rated voltage	48 V AC
	60 V DC
Number of positions	8
Signal type/category	Ethernet CAT6A, 10 Gbps
	CC-Link IE CAT6A, 10 Gbps
Standards/regulations	M12 connector IEC 61076-2-109
Contact material	CuSn
Contact carrier material	PA
Contact surface material	Ni/Au
Degree of protection	IP65/IP67
Transmission characteristics (category)	CAT6A

Characteristics head 1

Head type	Plug straight M12 / IP67
No. of positions (pin connector pattern)	8
Coding	X (Data)
Color	black

Material (component)	CuZn (Contact)
	Ni/Au (Contact surface)
	PA (Contact carriers)
	TPU, hardly inflammable, self-extinguishing (Grip)
	Zinc die-cast, nickel-plated (Screw connection)
Insulation resistance	≥ 100 MΩ
Insertion/withdrawal cycles	≥ 100
Torque	0.4 Nm
Ambient temperature (operation)	-25 °C ... 90 °C
Shielded	yes
Outer sheath, material	PUR
External sheath, color	water blue RAL 5021
Type type, plug side	Plug straight
Type type, socket side	free cable end

Characteristics head 2

Head type	free cable end
Coding	X (Data)
Color	black
Torque	0.4 Nm
Ambient temperature (operation)	-25 °C ... 90 °C

Standards and Regulations

Standards/specifications	M12 connector IEC 61076-2-109

Cable

Cable type	Ethernet 10 Gbit
Cable type (abbreviation)	94F
UL AWM style	20963 (80°C/30 V)
Signal type/category	Ethernet $CAT6_A$, 10 Gbps

Cable structure	4x2xAWG26/7; S/FTP
Conductor cross section	4x 2x 0.14 mm²
AWG signal line	26
Conductor structure signal line	7x 0.16 mm
Core diameter including insulation	1.04 mm
Wire colors	white/blue-blue, white/orange-orange, white/green-green, white/brown-brown
Twisted pairs	2 cores to the pair
Type of pair shielding	Aluminum-lined foil
Overall twist	4 pairs for core
Shielding	Tinned copper braided shield
Optical shield covering	70 %
External sheath, color	water blue RAL 5021
Outer sheath thickness	0.65 mm
External cable diameter D	6.4 mm ±0.2 mm
Minimum bending radius, fixed installation	4 x D
Minimum bending radius, flexible installation	8 x D
Tensile strength GRP	≤ 100 N
Cable weight	42 kg/km
Outer sheath, material	PUR
Material conductor insulation	Foamed PE
Conductor material	Bare Cu litz wires
Insulation resistance	≥ 500 MΩ*km
Loop resistance	≤ 290.00 Ω/km
Cable capacity	47 nF/km
Wave impedance	100 Ω ±5 Ω (at 100 MHz)
Near end crosstalk attenuation (NEXT)	75.3 dB (with 1 MHz)

	66.3 dB (at 4 MHz)
	61.8 dB (at 8 MHz)
	60.3 dB (at 10 MHz)
	57.2 dB (at 16 MHz)
	55.8 dB (at 20 MHz)
	54.3 dB (at 25 MHz)
	52.8 dB (at 31.25 MHz)
	48.4 dB (at 62.5 MHz)
	45.3 dB (at 100 MHz)
	40.8 dB (at 200 MHz)
	39.3 dB (at 250 MHz)
	38.1 dB (at 300 MHz)
	36.3 dB (at 400 MHz)
	34.8 dB (at 500 MHz)
Power-summated near end crosstalk attenuation (PSNEXT)	72.3 dB (with 1 MHz)
	63.3 dB (at 4 MHz)
	58.8 dB (at 8 MHz)
	57.3 dB (at 10 MHz)
	54.2 dB (at 16 MHz)
	52.8 dB (at 20 MHz)
	51.3 dB (at 25 MHz)
	49.9 dB (at 31.25 MHz)
	45.4 dB (at 62.5 MHz)
	42.3 dB (at 100 MHz)
	37.8 dB (at 200 MHz)
	36.3 dB (at 250 MHz)

	35.1 dB (at 300 MHz)
	33.3 dB (at 400 MHz)
	31.8 dB (at 500 MHz)
Attenuation	3.1 dB (with 1 MHz)
	5.7 dB (at 4 MHz)
	8 dB (at 8 MHz)
	8.9 dB (at 10 MHz)
	11.2 dB (at 16 MHz)
	12.6 dB (at 20 MHz)
	14.1 dB (at 25 MHz)
	15.8 dB (at 31.25 MHz)
	22.5 dB (at 62.5 MHz)
	28.7 dB (at 100 MHz)
	41.4 dB (at 200 MHz)
	46.6 dB (at 250 MHz)
	51.4 dB (at 300 MHz)
	60.1 dB (at 400 MHz)
	67.9 dB (at 500 MHz)
Return loss (RL)	20 dB (with 1 MHz)
	23 dB (at 4 MHz)
	24.5 dB (at 8 MHz)
	25 dB (at 10 MHz)
	25 dB (at 16 MHz)
	25 dB (at 20 MHz)
	24.2 dB (at 25 MHz)
	23.3 dB (at 31.25 MHz)
	20.7 dB (at 62.5 MHz)

	19 dB (at 100 MHz)
	16.4 dB (at 200 MHz)
	15.6 dB (at 250 MHz)
	15.6 dB (at 300 MHz)
	15.6 dB (at 400 MHz)
	15.6 dB (at 500 MHz)
Signal runtime	5.13 ns/m
Shield attenuation	≥ 80 dB (at 30 ... 100 MHz)
Nominal voltage, cable	≤ 100 V
Test voltage Core/Core	700 V (50 Hz, 1 min.)
Test voltage Core/Shield	700 V (50 Hz, 1 min.)
Flame resistance	according to IEC 60332-1-2
Halogen-free	according to IEC 60754-1
Resistance to oil	in accordance with DIN EN 60811-2-1
Ambient temperature (operation)	-40 °C ... 80 °C (cable, fixed installation)
	-20 °C ... 80 °C (cable, flexible installation)
Ambient temperature (installation)	-20 °C ... 80 °C
Ambient temperature (storage/transport)	-20 °C ... 80 °C

Environmental Product Compliance

REACh SVHC	Lead 7439-92-1
China RoHS	Environmentally Friendly Use Period = 50 years
	For details about hazardous substances go to tab “Downloads”, Category “Manufacturer's declaration”

KxS Technologies Oy
Zirkonipolku 2 A
FI-00170 Vantaa FINLAND
TEL. +358 50 343 7456
info@kxstechnologies.com

www.kxstechnologies.com